## 9GA0424P3G001 With pulse sensor with PWM control

PWM duty cycle

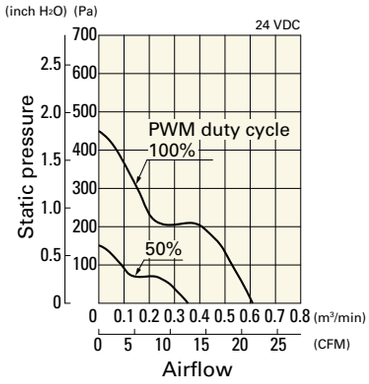


Operating voltage range

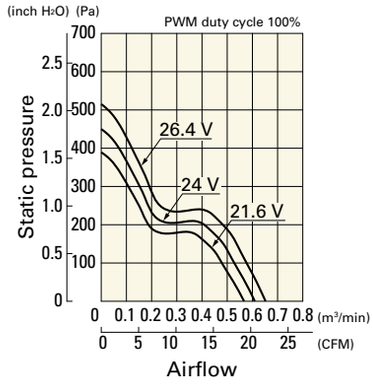


PWM duty - Speed characteristics example

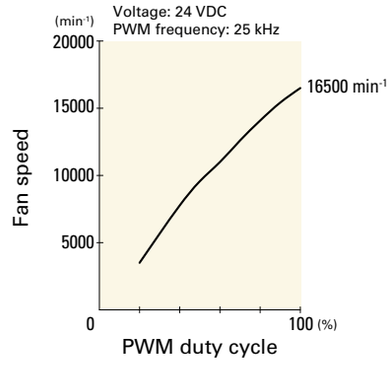


## 9GA0424P3H001 With pulse sensor with PWM control

PWM duty cycle

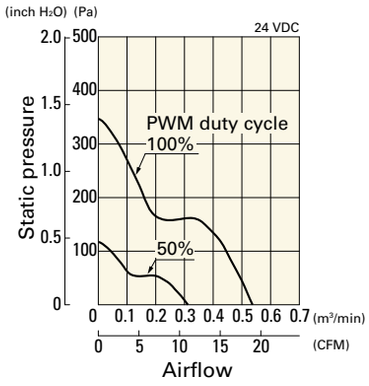


Operating voltage range

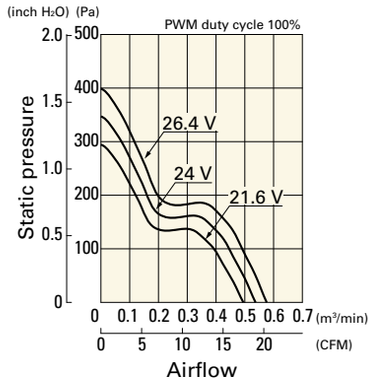


PWM duty - Speed characteristics example

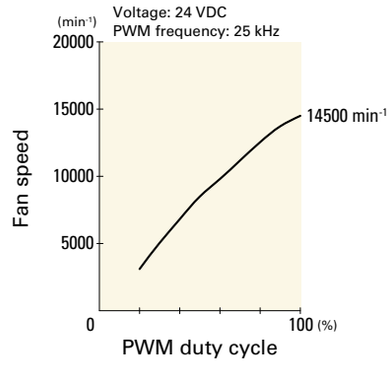


## 9GA0424P3M001 With pulse sensor with PWM control

PWM duty cycle

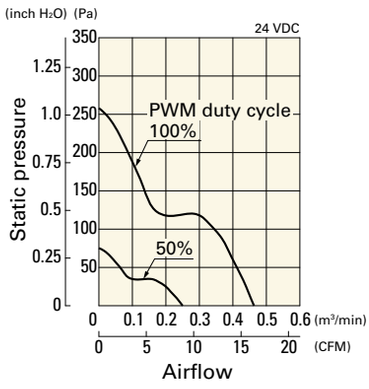


Operating voltage range

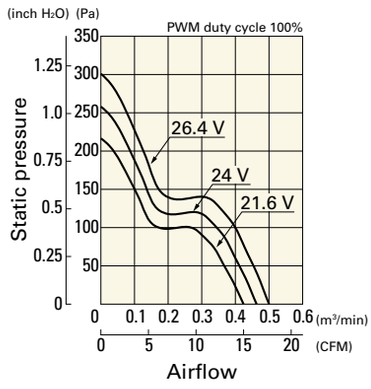


PWM duty - Speed characteristics example

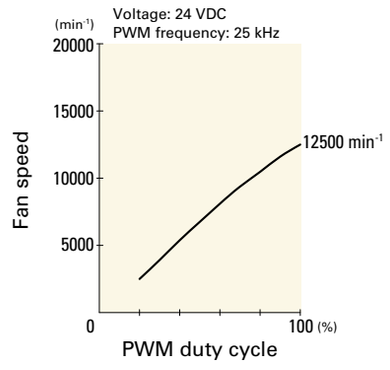




Beijing Hengrui Mechanical and Electrical Equipment Co,Ltd
+86 10-62547612 zhangyu@bjhengrui.cn en.bjhengrui.com

**9GA0412A301** With pulse sensor

Operating voltage range

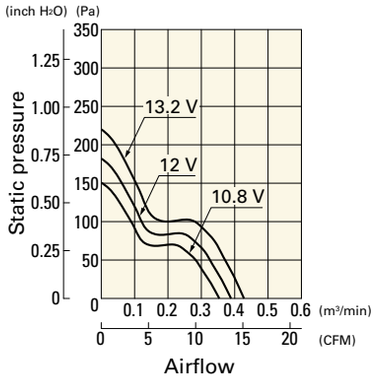


## Dimensions (unit: mm) (Ribbed frame with pulse sensor with PWM control)

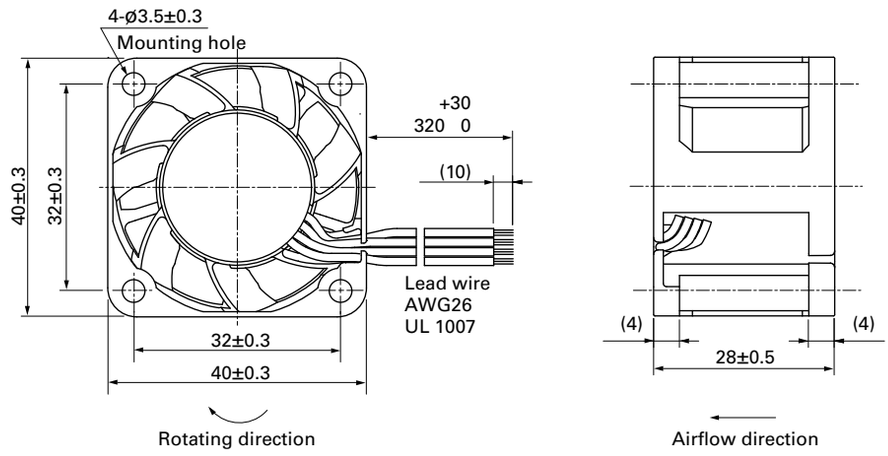


## Reference Dimensions of Mounting Holes and Vent Opening (unit: mm)

Inlet side, Outlet side

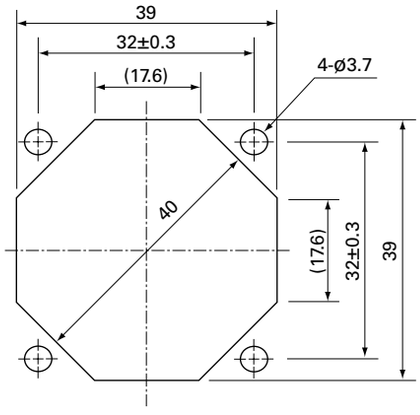


## Options

Finger guards page: p. 598

Model no.: 109-059, 109-059H



Beijing Hengrui Mechanical and Electrical Equipment Co,Ltd
+86 10-62547612 zhangyu@bjhengrui.cn en.bjhengrui.com

# 40×40×28 mm

## San Ace 40 9GE type Low Vibration Fan

## General Specifications

- Material ..... Frame: Aluminum, Impeller: Plastic (Flammability: UL 94V-0)
- Expected life ..... See the table below. (L10 life: 90% survival rate for continuous operation in free air at 60˚C, rated voltage) Expected life at 40°C is for reference only.
- Motor protection function ..... Locked rotor burnout protection, Reverse polarity protection For details, please refer to p. 616.
- Dielectric strength ..... 50/60 Hz, 500 VAC, for 1 minute (between lead wire conductors and frame)
- Insulation resistance ..... 10 MΩ min. at 500 VDC (between lead wire conductors and frame)
- Sound pressure level (SPL) ..... A-weighted sound pressure level (SPL) at 1 m away from the air inlet.
- Storage temperature ..... -30 to +70˚C (Non-condensing)
- Lead wire ..... ⊕Red ⊖Black Sensor Yellow Control Brown
- Mass ..... 55 g

## Specifications

The models listed below **have a pulse sensor with PWM control.**

| Model no. | Rated voltage [V] | Operating voltage range [V] | PWM duty cycle* [%] | Rated current [A] | Rated input [W] | Rated speed [min⁻¹] | Max. airflow [m³/min] | Max. airflow [CFM] | Max. static pressure [Pa] | Max. static pressure [inchH₂O] | SPL [dB (A)] | Operating temperature [˚C] | Expected life [h] |
|---|---|---|---|---|---|---|---|---|---|---|---|---|---|
| 9GE0412P3K03 | 12 | 10.8 to 13.2 | 100 | 0.84 | 10.08 | 16500 | 0.76 | 26.8 | 415 | 1.666 | 58 | -20 to +60 | 40000/60˚C (70000/40˚C) |
| | | | 0 | 0.07 | 0.84 | 3000 | 0.13 | 4.6 | 13 | 0.052 | 17 | | |
| 9GE0412P3J03 | | | 100 | 0.65 | 7.8 | 15000 | 0.69 | 24.4 | 343.0 | 1.378 | 56 | | |
| | | | 0 | 0.05 | 0.6 | 2650 | 0.12 | 4.2 | 10.7 | 0.042 | 14 | | |
| 9GE0412P3G03 | | | 100 | 0.47 | 5.64 | 13000 | 0.6 | 21.2 | 260 | 1.044 | 52 | | |
| | | | 0 | 0.05 | 0.6 | 2400 | 0.11 | 3.9 | 8.2 | 0.033 | 13 | | |

* PWM frequency is 25 kHz. Models without ratings for 0% PWM duty cycle have zero speed at 0%. When control terminal is open, speed is the same as at 100% duty cycle.

Note: Sensor and control options are available for selection. Refer to the table on p. 651.

## Airflow - Static Pressure Characteristics / PWM Duty - Speed Characteristics Example

**9GE0412P3K03** With pulse sensor with PWM control

PWM duty cycle

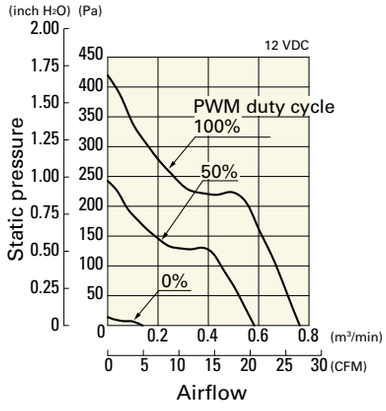


Operating voltage range

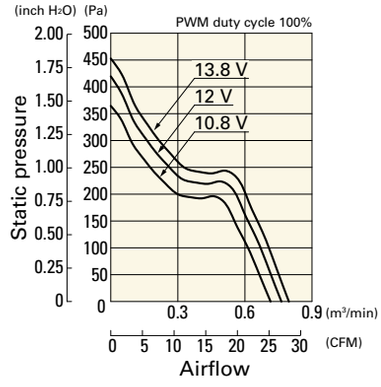


PWM duty - Speed characteristics example

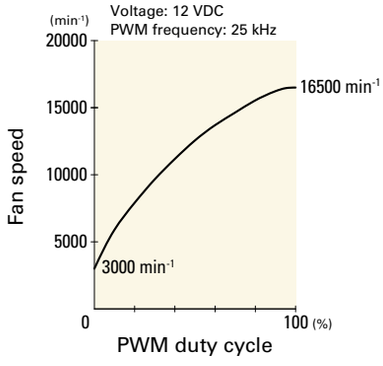




Beijing Hengrui Mechanical and Electrical Equipment Co,Ltd
+86 10-62547612 zhangyu@bjhengrui.cn en.bjhengrui.com

## 9GE0412P3J03 With pulse sensor with PWM control

PWM duty cycle

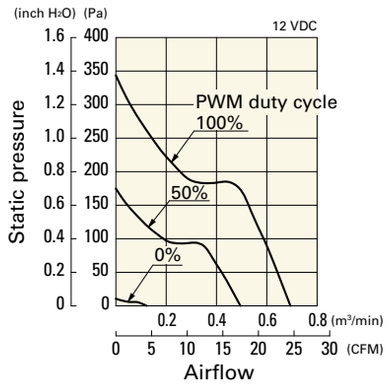


Operating voltage range

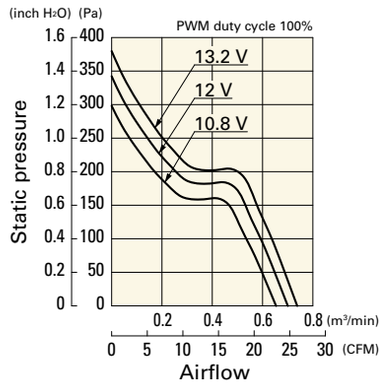


PWM duty - Speed characteristics example

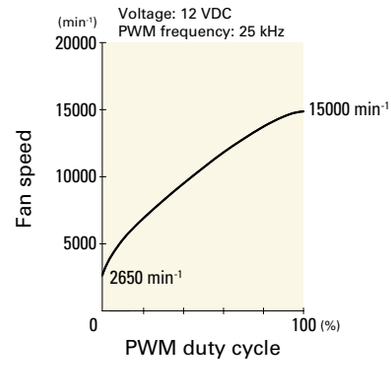


## 9GE0412P3G03 With pulse sensor with PWM control

PWM duty cycle

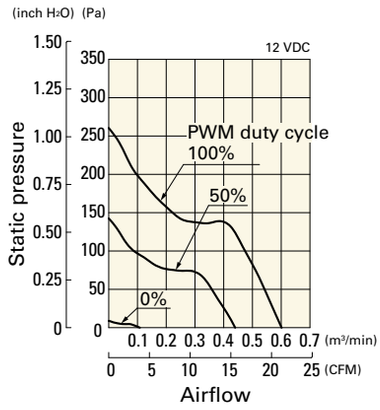


Operating voltage range

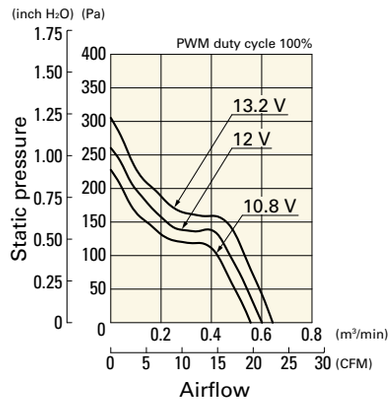


PWM duty - Speed characteristics example

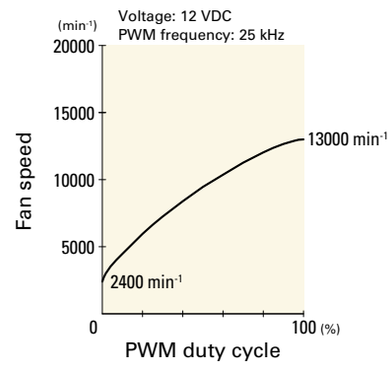


## Dimensions (unit: mm)

Screw-mount the fan through both flanges.

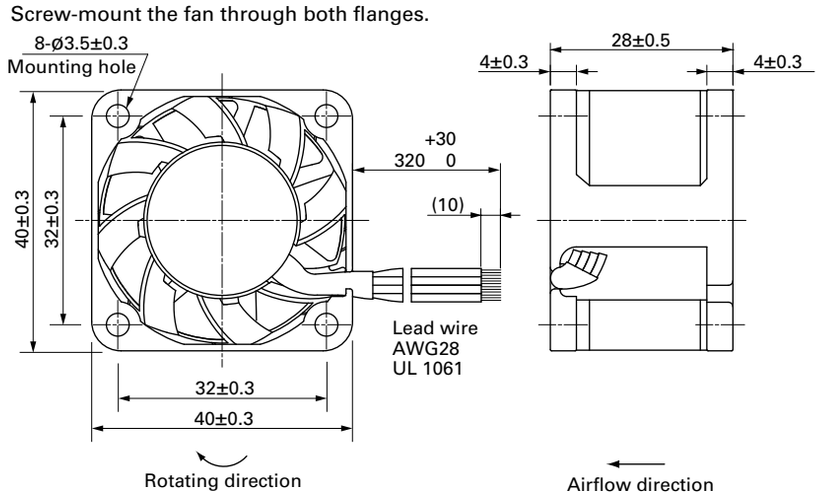




Beijing Hengrui Mechanical and Electrical Equipment Co,Ltd
+86 10-62547612 zhangyu@bjhengrui.cn en.bjhengrui.com

Inlet side, Outlet side

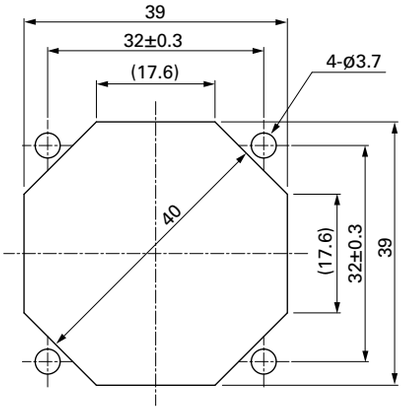


## Options

Finger guards page: p. 598

Model no.: 109-059, 109-059H



Beijing Hengrui Mechanical and Electrical Equipment Co,Ltd
+86 10-62547612 zhangyu@bjhengrui.cn en.bjhengrui.com